AUTOMATIC SELF-CENTERING CHUCK WITH DIA. 1600 MM HAVING 6 PENDULUM JAWS BALANCED 2+2+2
mounted on **intermediary base jaws** for the rapid change of chucking of different size diameters of ball bearing rings.

ROTATING SYSTEM FOR HARDENING WITH 64 SELF-CENTERING AUTOMATIC CHUCKS
for chucking of spring clips for vehicles, and having 32 actuating cylinders attached to just 1 collector to distribute in sequence 8 hydraulic ports.

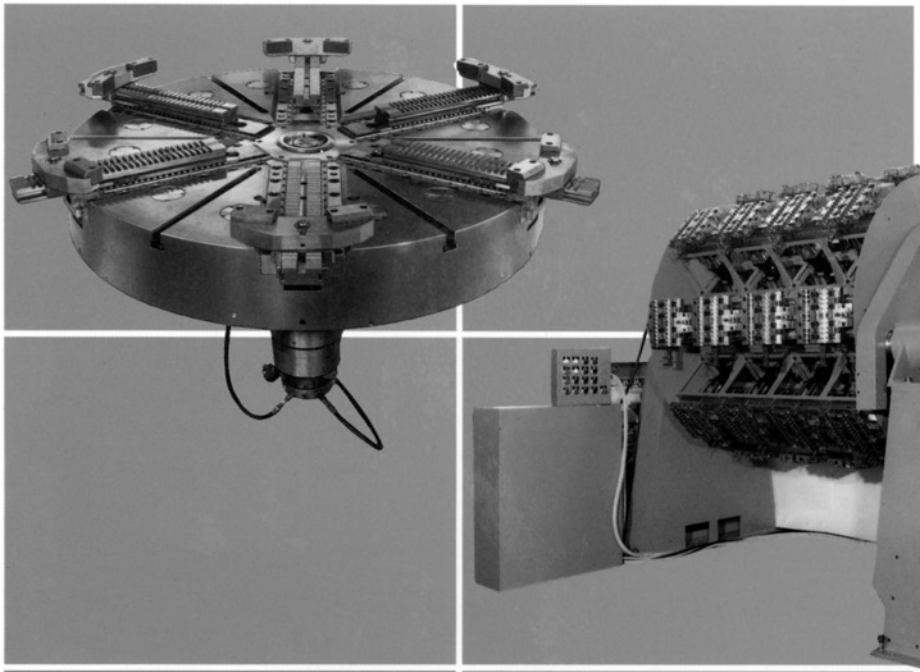

AUTOMATIC COLLET-HOLDER OF LARGE DIAMETER FOR CONTROL OF BI-CONICAL COLLETS WITH TWO LEVELS
for the external chucking on dia. 326 mm of piston liners for railroad motors.

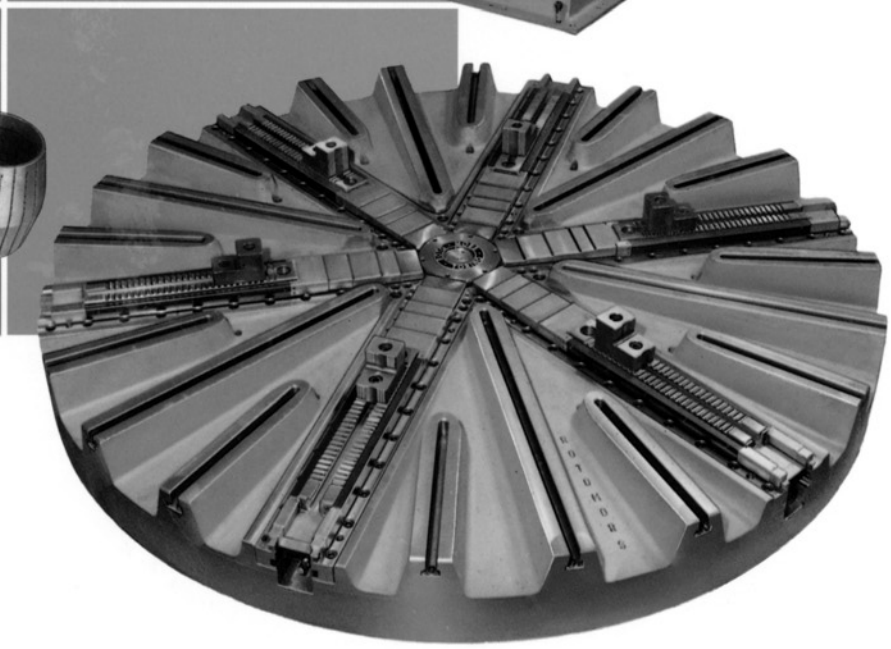

AUTOMATIC PLATFORM HYDRAULICALLY ACTUATED - DIA. 2800 MM WITH 6 JAWS BALANCED 2+2+2
to hold and machine large diameter and thin walled rings for ball bearings without deforming the ring.

AUTOMATIC PALLET CHANGING PATENTED SYSTEMS FOR VTL AND MACHINING CENTERS
APH pallet-holder hydraulically actuated, AP-J-C automatic Pallet-chuck with 3 or 6 jaws balanced 2+2+2, transfer station RTB+TC, checking station RB+APH, stand-by, loading and unloading stations FB and FB-S.

AUTOMATIC SELF-CENTERING CHUCKS FROM DIA. 1100 UP TO 1700 MM WITH 3+3 JAWS AT INDEPENDENT ACTUATOR BY DOUBLE HYDRAULIC CYLINDER,
used for turning operation on high speed monobloc railroad wheels.

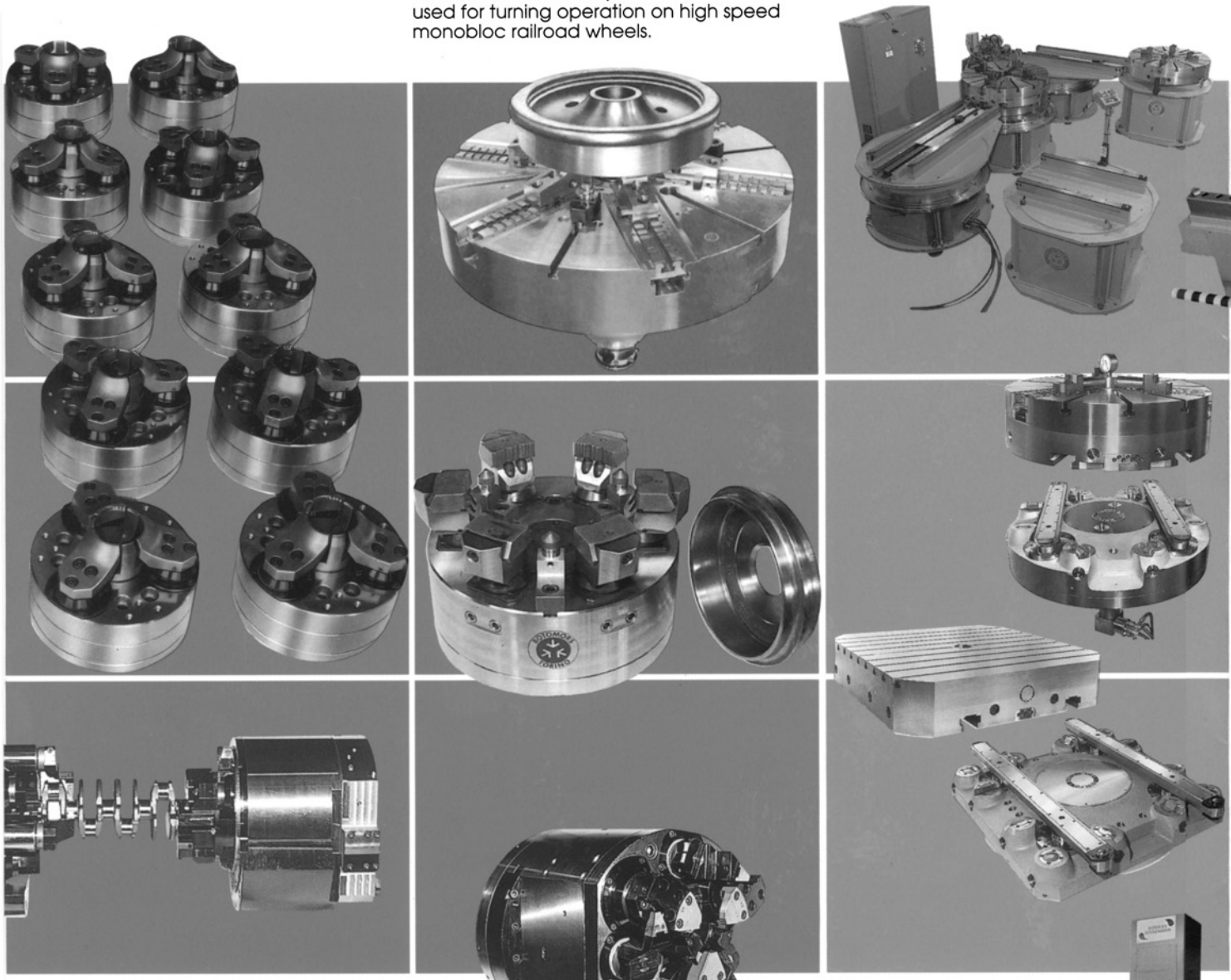

SPECIAL AUTOMATIC INDEXING CHUCK TYPE U-ASA II DIA. 420 MM FOR MACHINING OF CRANKSHAFTS CON-ROD PINS
with 3 self-centering jaws, axial reference drill, angular rotation with teeth face coupling and incorporated micro-switches for functions detection.

MOTORIZED SHUTTLES WITH 2 OR MORE SEATS FOR RAPID AUTOMATIC CHANGE OF MOLDS ON THE PRESSES.

AUTOMATIC INDEXING CHUCKS FROM DIA. 400 MM TO 2000 MM WITH HYDRAULIC ACTUATOR FOR CHUCKING OF PARTS WITH VARIOUS AXIS,
such as valve bodies with 6 angular positions and coupling with 2 opposite positions.
AUTOMATIC MANIPULATORS
for load/unload of valve bodies.

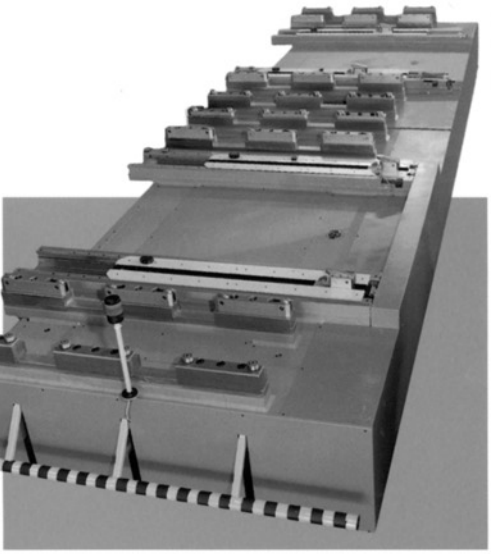

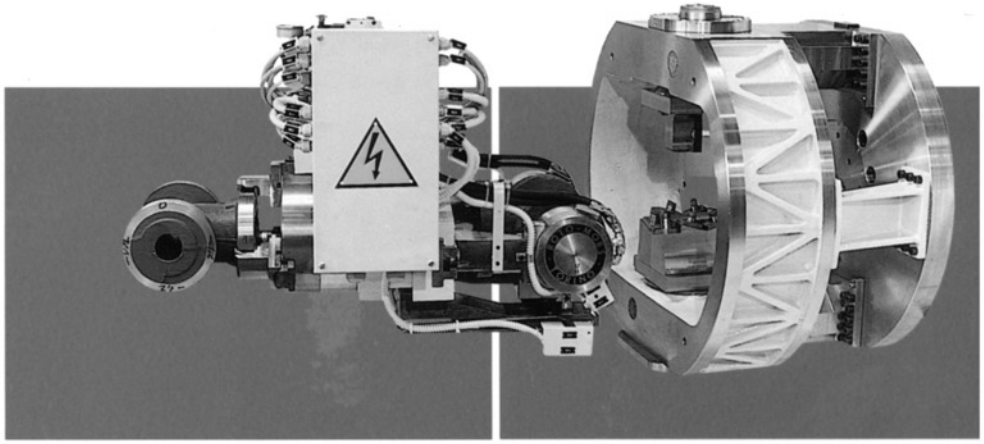

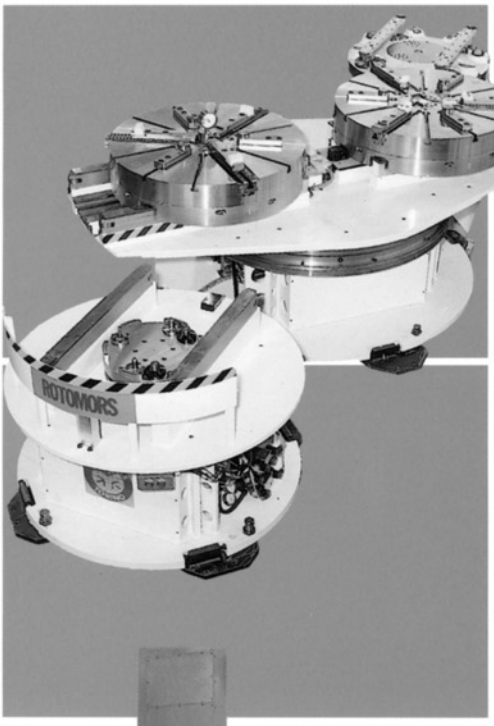

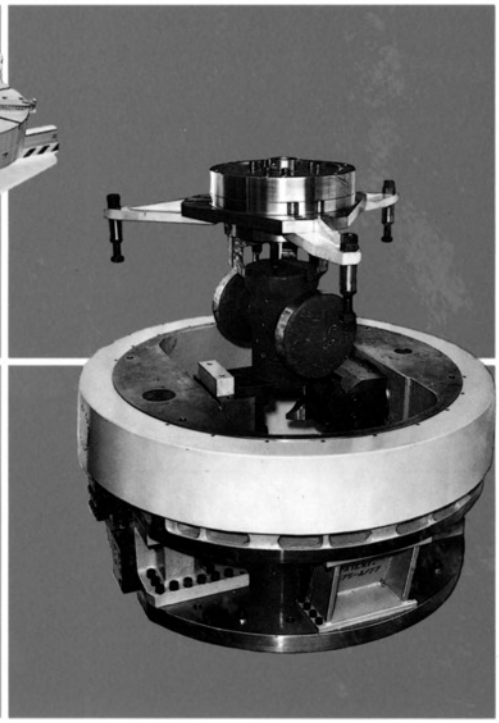

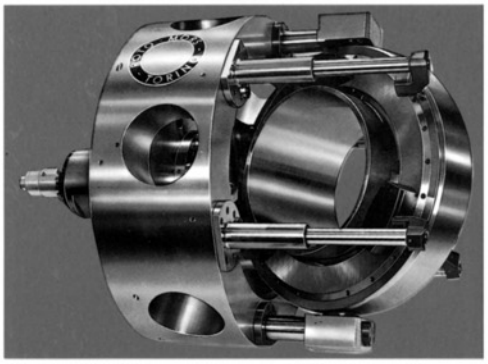

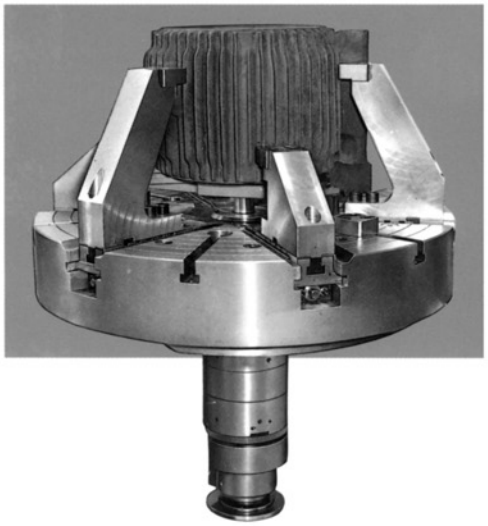

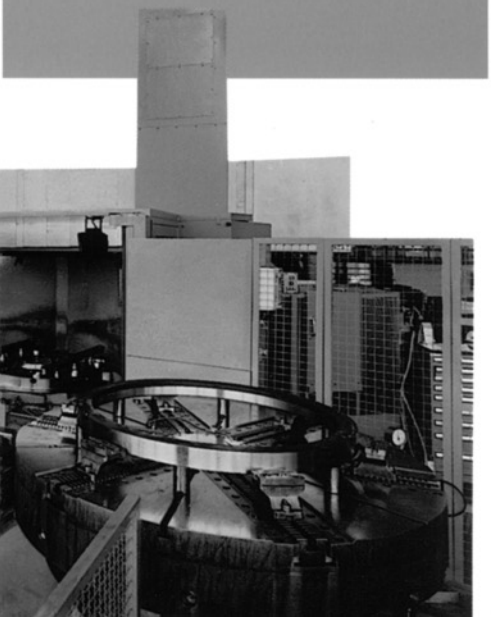

AUTOMATIC SELF-CENTERING CHUCK HYDRAULICALLY ACTUATED DIA. 1200 MM WITH 3+3 JAWS WITH 2 LEVELS WITH AXIAL RETRACTABLE PART REST
this chuck is used for the chucking of tall parts such as electrical motor housing.